Investigator Initiated Clinical Trials @ Vanderbilt-Ingram Cancer Center
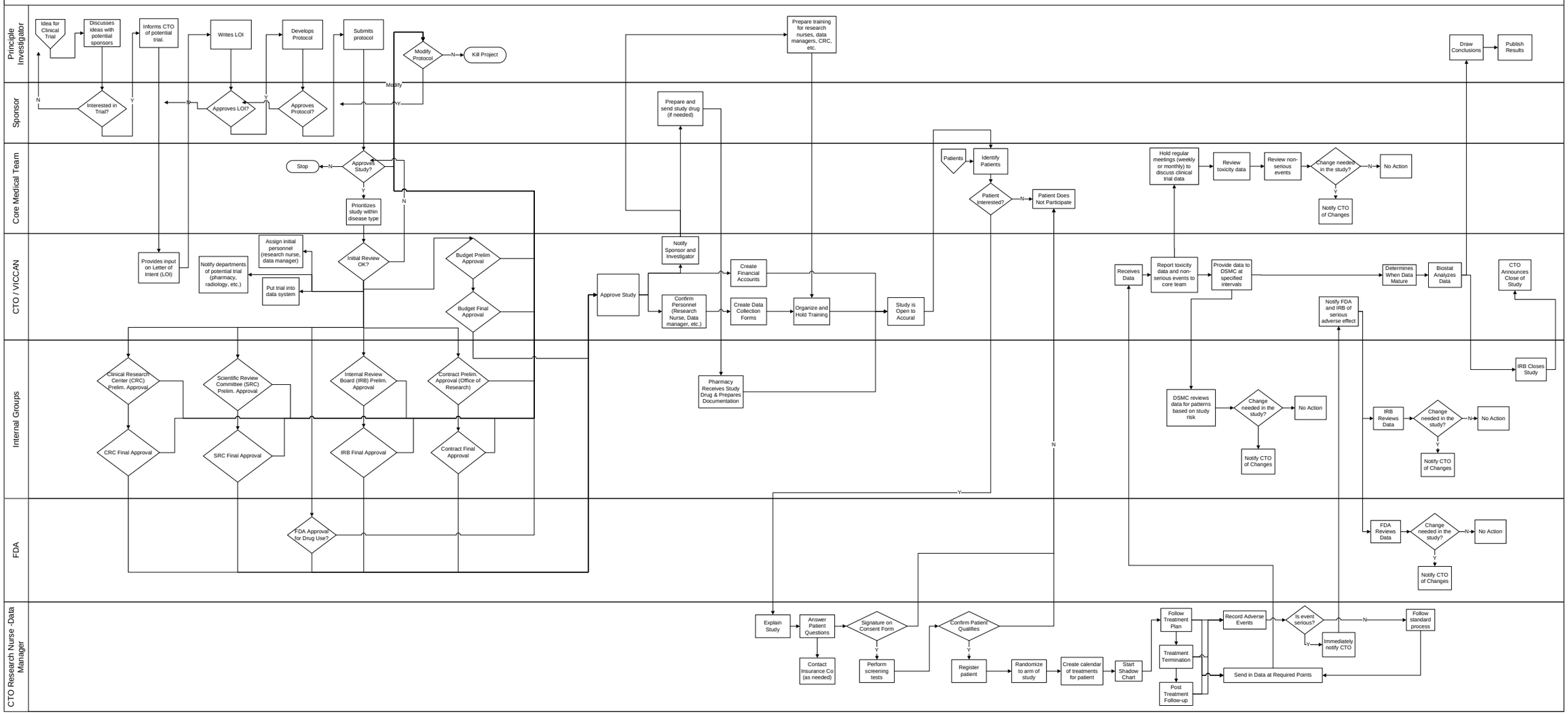
D. Dilts[1,2], A. Sandler[3], S. Moore[4], D. Browning[3], A. Johnson[1], A. Pardeshi[1], D. Rouch[3], B. Xie[2]
Vanderbilt University: [1]Vanderbilt Owen Graduate School of Management, [2]Vanderbilt School of Engineering, [3]Vanderbilt-Ingram Cancer Center (VICC) and [4]VICC Affiliates Network